SALADA

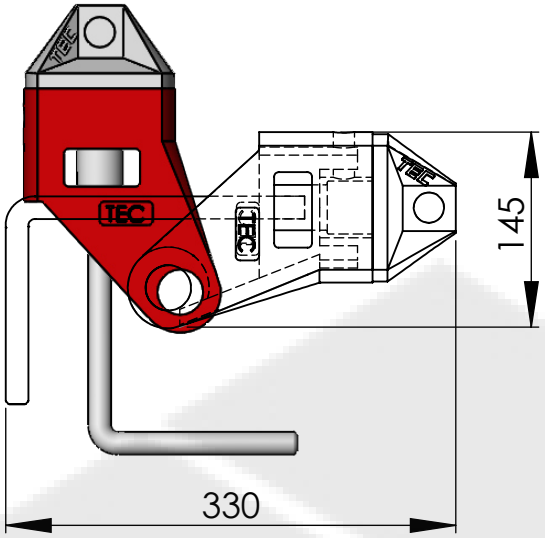

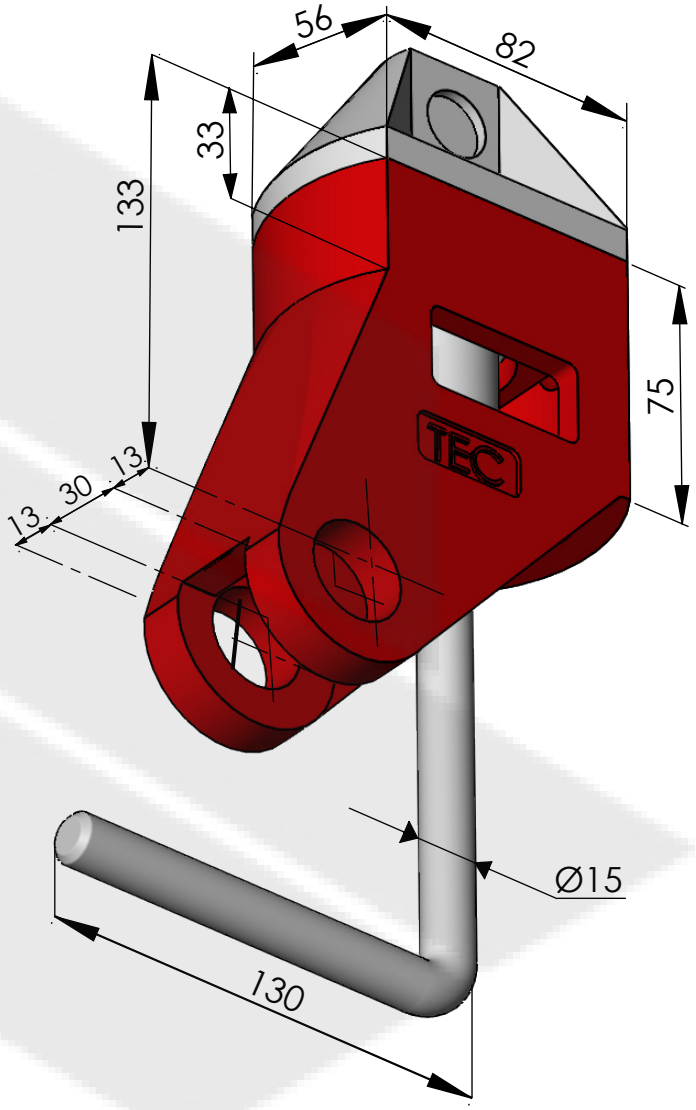

This drawing is valid for commercial purposes only and must not be copied, disclosed or used without our permission

Material:	Housing: ductile iron Cone: drop forged	
Weight:	4.5	kg
SWL	40	kN
BL	80	kN

SALADA INDUSTRIES FOR METAL
+966 50 016 5914
www.salada.sa
hello@salada.sa

Description:

TRAILER TWISTLOCK

Reference: **TL-10**

Real pieces might have variations in details such as weight and sizes